REVISION HISTORY				
REV	DATE	DESCRIPTION	ECO	BY
A	09-18-07	PRODUCTION RELEASE	11717	AK

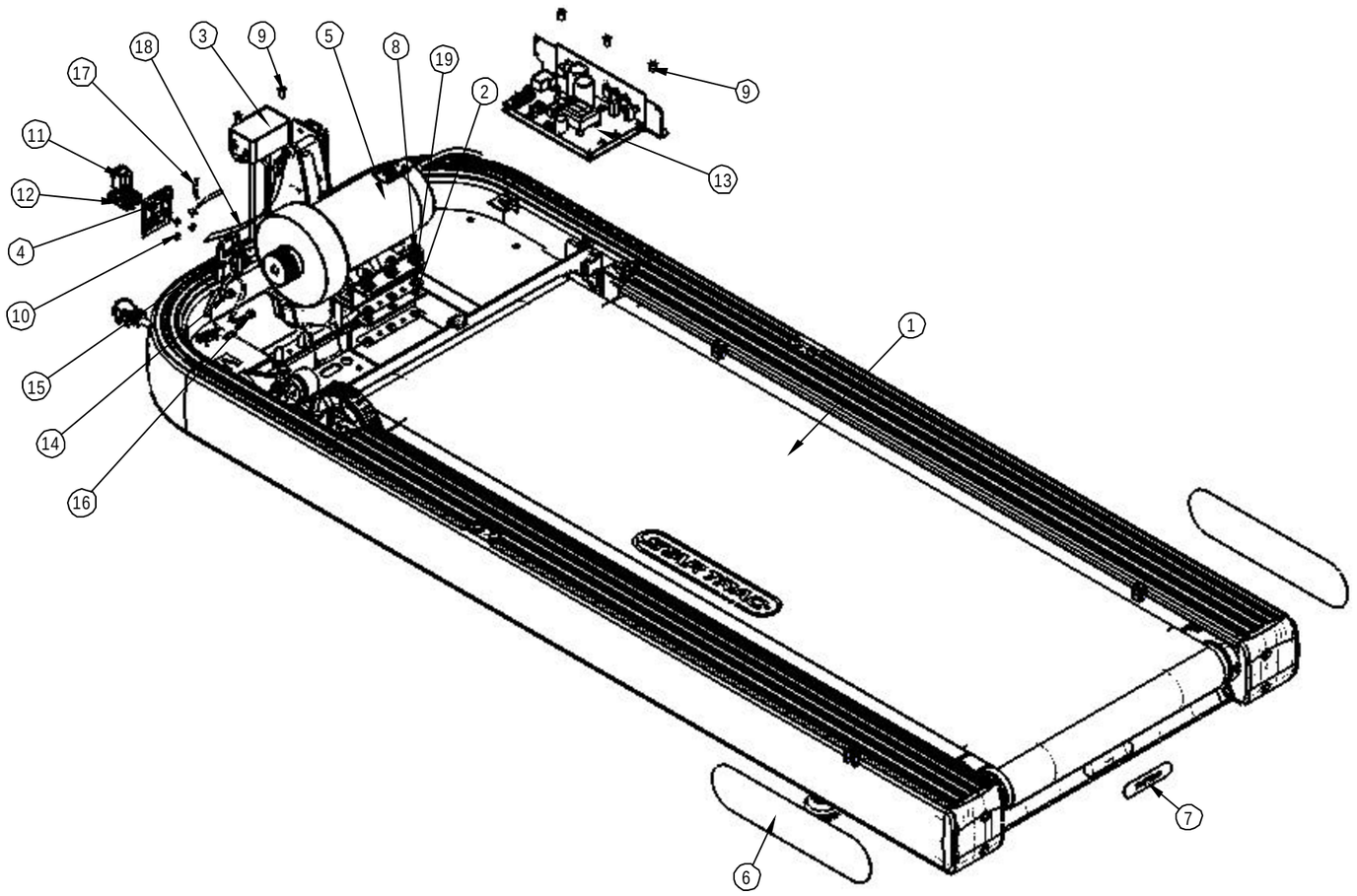

ITEM NO.	STARTRAC P/N	PART NUMBER	DESCRIPTION	Default/QTY.
1	740-6148	740-6148	ASSY, ELEV & RUNNING SYSTEM, 110V 14A	1
2	740-6080	STDP2200	GASKET, MOTOR BRK INSULATOR	2
3	440-0257	440-0257	FILTER, EMI, 250V, 16A	1
4	740-6081	STDP2600	BASE, BREAKER, W/INSERTS	1
5	740-6158	740-6158	ASSY,MOTOR,180 VDC, SPORT TREAD	1
6	050-2073	050-2073	LABEL,STAR TRAC,15X3.55"	2
7	050-2113	050-2113	LOGO,REAR CROSS BAR, S-TR	1
8	740-6520	GB6177M8CL2	NUT, GB6177M8CL2	6
9	740-6512	GB818M5*15¦ ¦ 2	SCREW,GB818M5*15	5
10	740-6521	GB818M4*8¦ ¦ 2	SCREW, GB818M4*8	4
11	740-6116	F23	SWITCH, ON/OFF, 110V, 18A	1
12	740-6169	F24	BREAKER, 110V, 15A	2
13	740-6156	740-6156	ASSY, MCB, 110V, W/BRACKET, TR	1
14	740-6023	740-6023	Assy, Cable, AC, L1	1
15	740-6031	740-6031	Assy, Cable, AC, EMI To MCB, AC/L1	1
16	740-6032	740-6032	Assy, Cable, AC, EMI To MCB, N/L2	1
17	740-6036	740-6036	Assy, Cable, Generic GND 2, Sport Tread	2
18	740-6022	740-6022	Assy, Cable, Main Interface, Lower	1
19	740-6129	STDP2300 (2)	INSOLATOR, MOTOR PAD, MYLAR, S-TRc	4

NOTICE OF PROPRIETARY INFORMATION

THIS DOCUMENT SHALL NOT BE REPRODUCED NOR SHALL THE INFORMATION CONTAINED HEREIN BE USED BY OR DISCLOSED TO OTHER EXCEPT AS EXPRESSLY AUTHORIZED BY UNISEN INC, D.B.A. STAR TRAC.

DOCUMENT STATUS:

NOTES:

CLASS OF WORK		UNLESS OTHERWISE SPECIFIED DIMS ARE IN mm. TOLERANCES FOR MEASURE OF LENGTH ARE: 0.5 to 3	> 3 to 6	> 6 to 30	> 30 to 120	> 120 to 400	> 400 to 1000	> 1000 to 2000	> 2000
FINE		±0.05	±0.05	±0.1	±0.15	±0.2	±0.3	±0.5	-----
MEDIUM	X	±0.1	±0.1	±0.2	±0.3	±0.5	±0.8	±1.2	±2
COARSE		±0.2	±0.3	±0.5	±0.8	±1.2	±2	±3	±4
VERY COARSE		-----	±0.5	±1	±1.5	±2.5	±4	±6	±8

MATERIAL
SEE BOM

FINISH
N/A

VENDOR: P/N: **740-6151**

THIRD ANGLE PROJECTION

	INITIAL	DATE
DRAWN	AK	08/28/07
CHECKED		
APPROVED		
	U.O.M.	MM

UNISEN, INC. DBA STAR TRAC
14410 Myford Road
Irvine CA 92606

STARTRAC PART NO: 740-6151 | REV: A

TITLE: ASSY, BASE, 110VDC 14A

SCALE: 1:20 | SHEET 1 OF 1 | SHEET SIZE: B